central diesel

Nidec Power

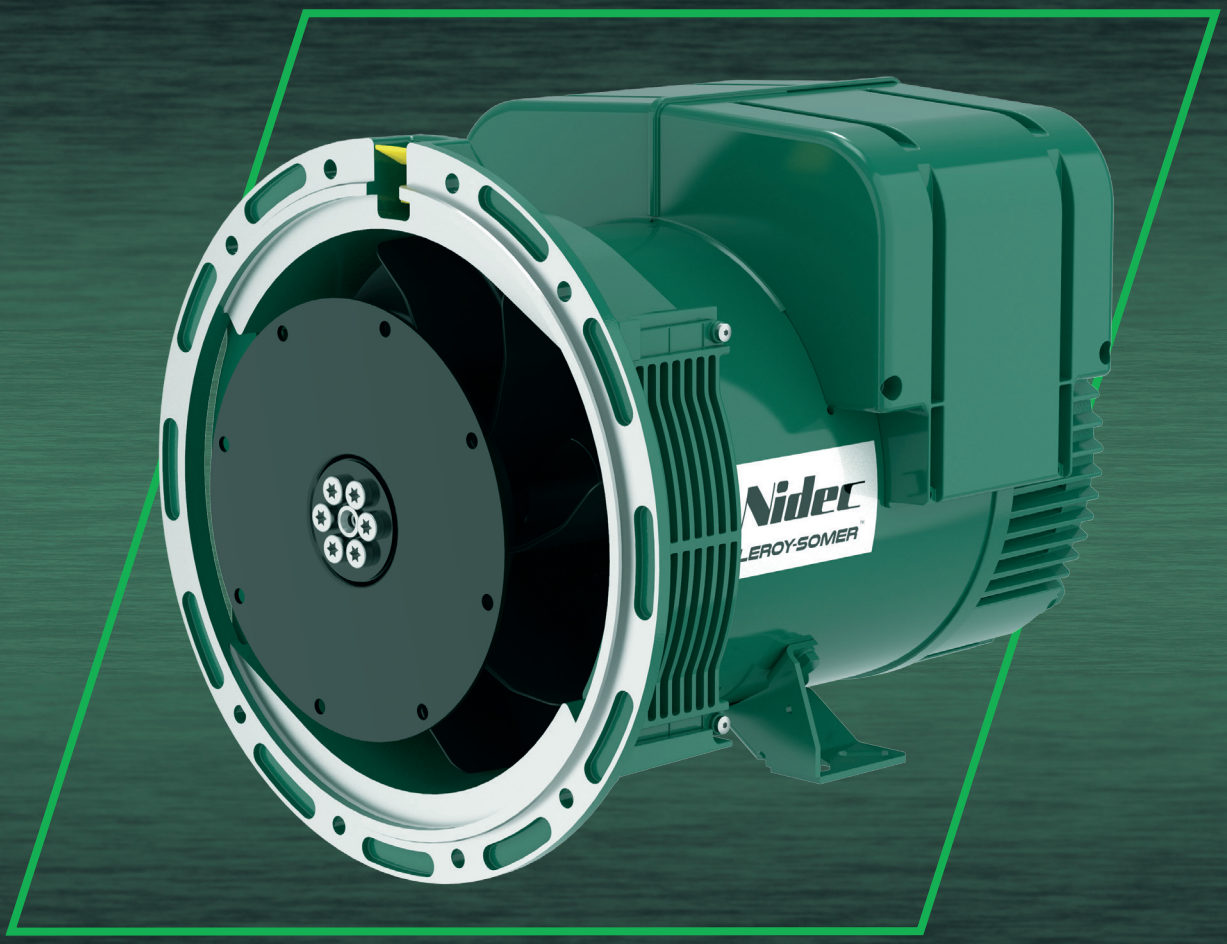

LSA 40

Low Voltage Alternator - 4 poles

Three-phase

10 to 20 kVA - 50 Hz / 12.5 to 25 kVA - 60 Hz

Electrical and mechanical data

LEROY-SOMER™

The best of performance

The Leroy-Somer™ LSA 40 alternator has been designed to offer you the best power generation performances.
With its meticulous design and optimized architecture, the LSA 40 strikes the perfect balance between compactness, reliability, performance and longevity.
Whatever your application, the Leroy-Somer™ LSA 40 alternator will meet your needs and will adapt to all situations.

Standards

The Leroy-Somer™ LSA 40 alternator meets all key international standards and regulations such as IEC 60034, NEMA MG 1.32-33, ISO 8528-3, CSA C22.2 n°100-14, UL 1446, UL 1004-1 and UL 1004-4.
EC, UKCA, CMIM, CSA, UL 1446, UL recognized and UL listed declarations and certifications are available for the LSA 40.
The standards IEC 61000-6-2, IEC 61000-6-3, IEC 61000-6-4, VDE 0875G, VDE 0875N and EN 55011 allow compliance with group 1 class A for the European zone.
The Leroy-Somer™ LSA 40 alternator is designed, manufactured and marketed in an ISO 9001 and ISO 14001 quality assurance environment.

Electrical characteristics and performances

- Class H insulation
- 2/3 pitch winding, standard 12-wire (6) reconnectable
- Voltage range:
  - 50 Hz: 220V - 240V and 380V - 415V (440V)
  - 60 Hz: 208V - 240V and 380V - 480V
- High efficiency and motor starting capacity
- Other voltages are possible with optional adapted windings:
  - 50 Hz: 440V (no. 7), 500V (no. 9)
  - 60 Hz: 380V and 416V (no. 8), 600V (no. 9)

Excitation and regulation system

Excitation system			Regulation options		
AVR	**SHUNT**	**AREP** (option)	**C.T. Current transformer for paralleling**	**Mains paralleling**	**Remote voltage potentiometer**
R220	Standard				
D350	Option	Standard	√*		√
D550**	Option	Option	√*	√	√

*: only with AREP **: external mounting

3-phase sensing is included as a standard with digital regulators.

Protection system and options

- Degree of protection: IP 23
- Complete winding protection for clean environments with relative humidity ≤ 95 %, including indoor marine environments
- Options:
  - Filters on air inlet: derating 5%
  - Filters on air inlet and air outlet (IP 44): derating 10%
  - Reinforced winding protection for harsh environments and relative humidity greater than 95%
  - Space heater
  - Thermal protection for stator windings
  - Shaft height: H = 180 mm (to be specified when ordering)

Mechanical construction

- Compact and rigid assembly to better withstand generator vibrations
- Steel frame and terminal box
- Aluminum flanges and shields
- Two-bearing and single-bearing versions designed to be suitable for commercially-available heat engines
- Half-key balancing
- Greased for life bearings (20 000h)
- Direction of rotation: clockwise and anti-clockwise (without derating)

Terminal box design

- Easy access to the voltage regulator and to the connections
- 8-way terminal block for reconnecting the voltage
- Predrilled holes for cable gland

General characteristics

Insulation class	H	Excitation system	SHUNT	AREP
Winding pitch	2/3 (wind. 6)	AVR type	R220	D350
Number of wires	12	Voltage regulation (*)	± 0.5%	± 0.25%
Protection	IP 23	Short-circuit current	-	300% (3 IN): 10 s
Altitude	≤ 1 000 m	Total Harmonic Distortion THD (**) in no-load	< 3%	
Overspeed	2 250 R.P.M.	Total Harmonic Distortion THD (**) on linear load	< 5%	
Air flow	0.06 m³/s (50 Hz) - 0.072 m³/s (60 Hz)	Waveform: NEMA = TIF (**)	< 50	

(*) Steady state (**) Total harmonic distortion between phases, in no-load or on linear load

Ratings 50 Hz - 1 500 R.P.M.

kVA / kW - P.F. = 0.8																					
Duty/T°C		Continuous duty/40°C					Continuous duty/40°C					Stand-by/40°C					Stand-by/27°C				
Class/T°K		H/125°K					F/105°K					H/150°K					H/163°K				
Phase			3 ph.			1 ph.		3 ph.			1 ph.		3 ph.			1 ph.		3 ph.			1 ph.
Y		380V	**400V**	415V	440V	ΔΔ	380V	**400V**	415V	440V	ΔΔ	380V	**400V**	415V	440V	ΔΔ	380V	**400V**	415V	440V	ΔΔ
Δ		220V	**230V**	240V		230V	220V	**230V**	240V		230V	220V	**230V**	240V		230V	220V	**230V**	240V		230V
YY			**200V**		220V			**200V**		220V			**200V**		220V			**200V**		220V	
LSA 40 VS1	kVA	10	**10**	10	9	7	9	**9**	9	8	6.5	10.5	**10.5**	10.5	9.5	7.5	11	**11**	11	10	8
	kW	*8*	***8***	*8*	*7*	*5.5*	*7*	***7***	*7*	*6.5*	*5*	*8.5*	***8.5***	*8.5*	*7.5*	*6*	*9*	***9***	*9*	*8*	*6.5*
LSA 40 VS2	kVA	12.5	**12.5**	12.5	11	9	11.5	**11.5**	11.5	10	8	13.5	**13.5**	13.5	12	9.5	14	**14**	14	12.5	10
	kW	*10*	***10***	*10*	*9*	*7*	*9*	***9***	*9*	*8*	*6.5*	*11*	***11***	*11*	*9.5*	*7.5*	*11*	***11***	*11*	*10*	*8*
LSA 40 S3	kVA	15	**15**	15	13	10.5	14	**14**	14	12	10	16	**16**	16	14	11.5	16.5	**16.5**	16.5	15	12
	kW	*12*	***12***	*12*	*10.5*	*8.5*	*11*	***11***	*11*	*9.5*	*8*	*13*	***13***	*13*	*11*	*9*	*13*	***13***	*13*	*12*	*9.5*
LSA 40 S4	kVA	17.5	**17.5**	17.5	16	12.5	16	**16**	16	14.5	11.5	19	**19**	19	17	13.5	19.5	**19.5**	19.5	17.5	14
	kW	*14*	***14***	*14*	*13*	*10*	*13*	***13***	*13*	*11.5*	*9*	*15*	***15***	*15*	*13.5*	*11*	*15.5*	***15.5***	*15.5*	*14*	*11*
LSA 40 M5	kVA	20	**20**	20	18	14	18.5	**18.5**	18.5	16.5	13	21.5	**21.5**	21.5	19	15	22	**22**	22	20	15.5
	kW	*16*	***16***	*16*	*14.5*	*11*	*15*	***15***	*15*	*13*	*10.5*	*17*	***17***	*17*	*15*	*12*	*17.5*	***17.5***	*17.5*	*16*	*12.5*

Ratings 60 Hz - 1 800 R.P.M.

kVA / kW - P.F. = 0.8																					
Duty/T°C		Continuous duty/40°C					Continuous duty/40°C					Stand-by/40°C					Stand-by/27°C				
Class/T°K		H/125°K					F/105°K					H/150°K					H/163°K				
Phase			3 ph.			1 ph.		3 ph.			1 ph.		3 ph.			1 ph.		3 ph.			1 ph.
Y		380V	416V	440V	**480V**	ΔΔ	380V	416V	440V	**480V**	ΔΔ	380V	416V	440V	**480V**	ΔΔ	380V	416V	440V	**480V**	ΔΔ
Δ		220V	240V			240V	220V	240V			240V	220V	240V			240V	220V	240V			240V
YY			208V	220V	**240V**			208V	220V	**240V**			208V	220V	**240V**			208V	220V	**240V**	
LSA 40 VS1	kVA	10	11	11.5	**12.5**	9	9.5	10.5	10.5	**11.5**	8.5	11	11.5	12.5	**13.5**	9.5	11.5	12	13	**14**	10
	kW	*8*	*9*	*9*	***10***	*7*	*7.5*	*8.5*	*8.5*	***9***	*7*	*9*	*9*	*10*	***11***	*7.5*	*9*	*9.5*	*10.5*	***11***	*8*
LSA 40 VS2	kVA	12.5	13.5	14.5	**15.5**	11.5	11.5	12.5	13.5	**14.5**	10.5	13.5	14.5	15.5	**16.5**	12	14	15	16	**17**	12.5
	kW	*10*	*11*	*11.5*	***12.5***	*9*	*9*	*10*	*11*	***11.5***	*8.5*	*11*	*11.5*	*12.5*	***13***	*9.5*	*11*	*12*	*13*	***13.5***	*10*
LSA 40 S3	kVA	15	16.5	17.5	**19**	13	14	15.5	16.5	**17.5**	12	16	18	19	**20**	14	17	18.5	19.5	**21**	14.5
	kW	*12*	*13*	*14*	***15***	*10.5*	*11*	*12.5*	*13*	***14***	*9.5*	*13*	*14.5*	*15*	***16***	*11*	*13.5*	*15*	*15.5*	***17***	*11.5*
LSA 40 S4	kVA	17.5	19	20	**22**	14.5	16.5	18	19	**20.5**	13	19	20.5	21.5	**23.5**	15.5	19.5	21	22	**24.5**	16
	kW	*14*	*15*	*16*	***17.5***	*11.5*	*13*	*14.5*	*15*	***16.5***	*10.5*	*15*	*16.5*	*17*	***19***	*12.5*	*15.5*	*17*	*17.5*	***19.5***	*13*
LSA 40 M5	kVA	20	22	23	**25**	16	18.5	20.5	21.5	**23**	15	21.5	23.5	25	**27**	17	22	24.5	26	**27.5**	17.5
	kW	*16*	*17.5*	*18.5*	***20***	*13*	*15*	*16.5*	*17*	***18.5***	*12*	*17*	*19*	*20*	***21.5***	*13.5*	*17.5*	*19.5*	*21*	***22***	*14*

Paralleling with the grid or between alternators may require some specific configuration. Please make sure to consider the rating table (ref. 6627) when alternator selection.

Efficiencies 400 V - 50 Hz (— P.F.: 0.8) (--- P.F.: 1)

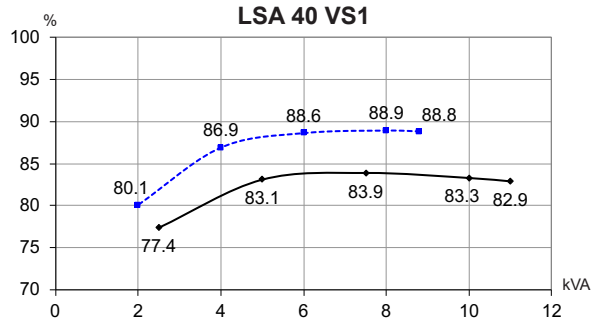

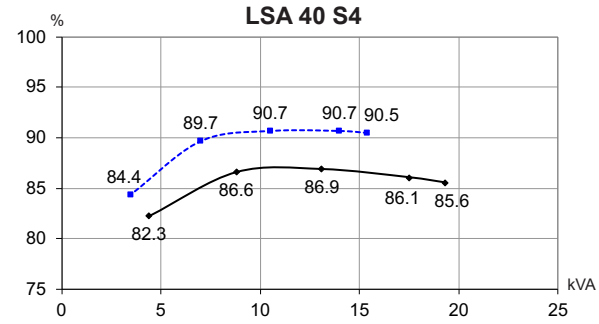

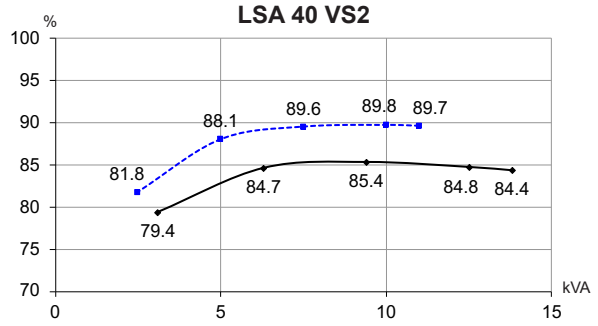

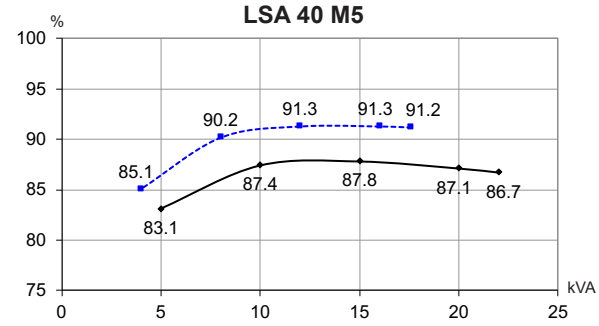

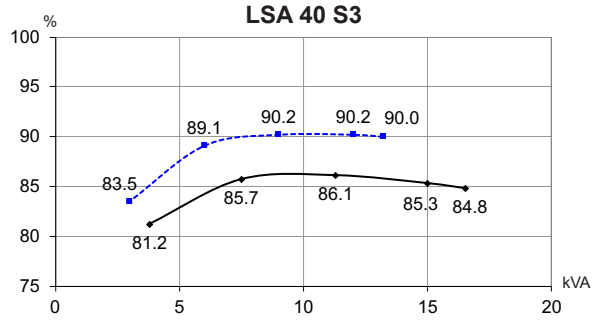

Reactances (%). Time constants (ms) - Class H / 400 V

		VS1	VS2	S3	S4	M5
Kcc	Short-circuit ratio	0.7	0.67	0.6	0.6	0.61
Xd	Direct-axis synchronous reactance unsaturated	167	174	190	195	193
Xq	Quadrature-axis synchronous reactance unsaturated	85	88	97	99	98
T'do	No-load transient time constant	719	790	837	878	926
X'd	Direct-axis transient reactance saturated	17.2	16.3	16.8	16.4	15.4
T'd	Short-circuit transient time constant	74	74	74	74	74
X"d	Direct-axis subtransient reactance saturated	8.6	8.1	8.4	8.2	7.7
T"d	Subtransient time constant	7	7	7.4	7	7
X"q	Quadrature-axis subtransient reactance saturated	16.1	15.9	16.8	16.8	16.2
Xo	Zero sequence reactance	0.71	0.68	0.7	0.68	0.64
X2	Negative sequence reactance saturated	12.36	12.04	12.66	12.55	12.01
Ta	Armature time constant	11	11	11	11	11

Other class H / 400 V data

io (A)	No-load excitation current SHUNT / AREP	0.77 / 1.06	0.78 / 1.06	0.76 / 1.03	0.75 / 1.03	0.72 / 0.98
ic (A)	On-load excitation current SHUNT / AREP	1.94 / 2.65	1.97 / 2.69	2.05 / 2.79	2.06 / 2.8	1.95 / 2.66
uc (V)	On-load excitation voltage SHUNT / AREP	23.7 / 17.1	24 / 17.3	24.9 / 17.9	24.9 / 18	23.6 / 17
ms	Response time (ΔU = 20% transient)	500	500	500	500	500
kVA	Start (ΔU = 20% cont. or ΔU = 30% trans.) SHUNT / AREP	24.6	29.9	36.1	43.3	52.7
%	Transient ΔU (on-load 4/4) SHUNT / AREP - P.F.: 0.8 $_{LAG}$	16.1	18.4	17.3	17.1	16.7
W	No-load losses	461	514	540	590	645
W	Heat dissipation	1 597	1 784	2 063	2 255	2 352

Transient voltage variation 400V - 50 Hz

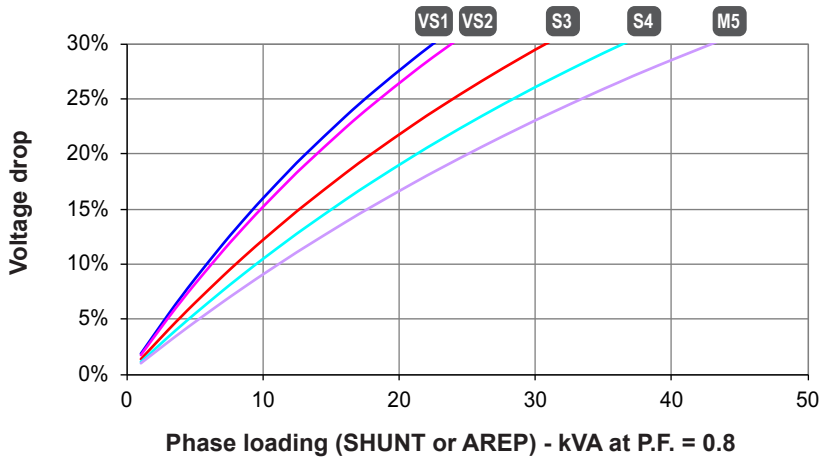

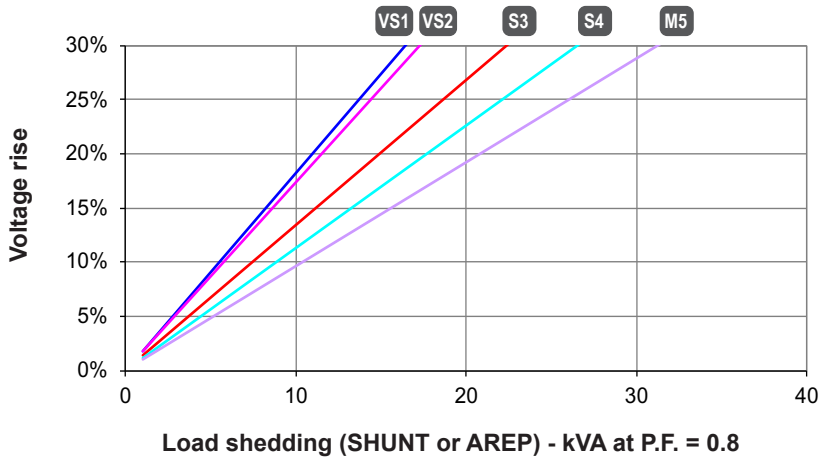

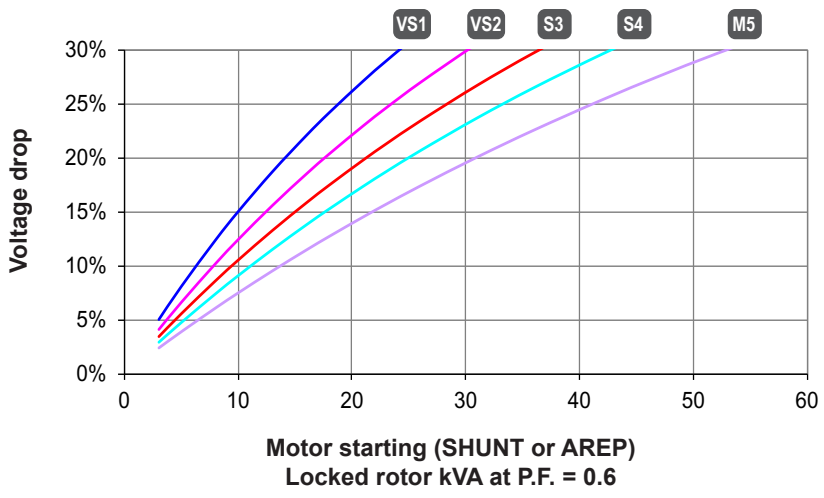

1) For a starting P.F. other than 0.6, the starting kVA must be multiplied by K = Sine P.F. / 0.8
2) For voltages other than 400V (Y), 230V (Δ) at 50 Hz, then kVA must be multiplied by $(400/U)^2$ or $(230/U)^2$.

Efficiencies 480 V - 60 Hz (— P.F.: 0.8) (--- P.F.: 1)

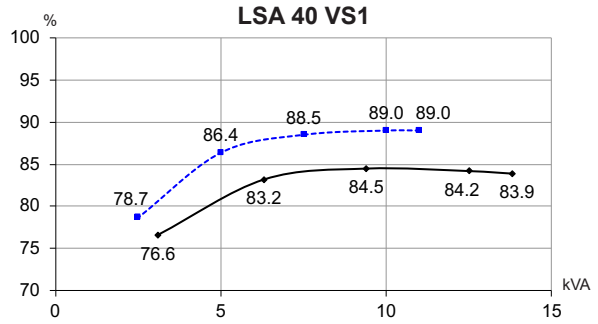

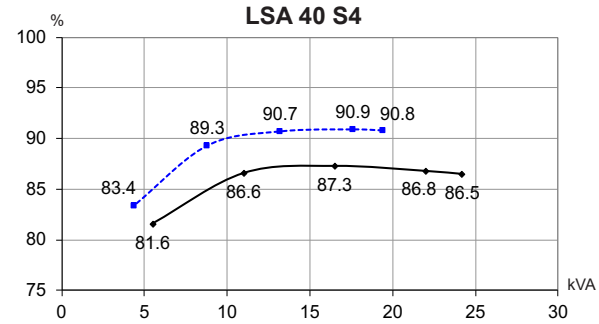

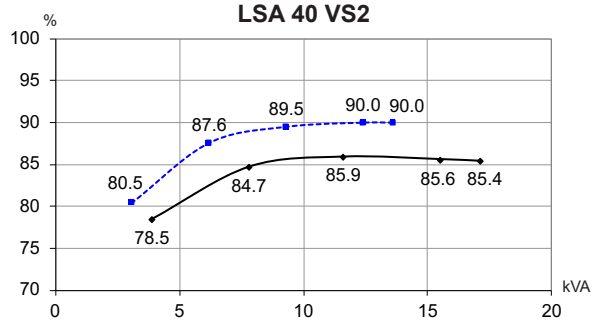

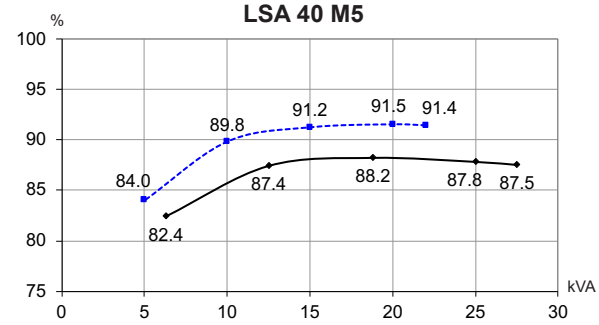

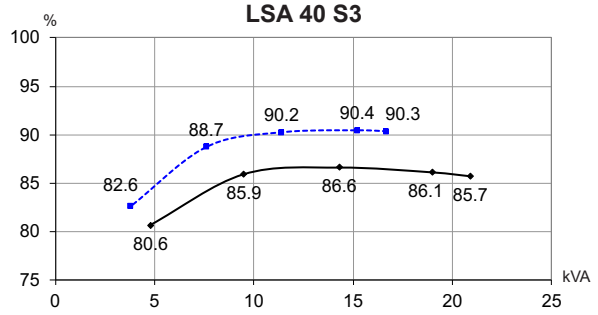

Reactances (%). Time constants (ms) - Class H / 480 V

		VS1	VS2	S3	S4	M5
Kcc	Short-circuit ratio	0.67	0.65	0.57	0.57	0.58
Xd	Direct-axis synchronous reactance unsaturated	174	180	201	204	201
Xq	Quadrature-axis synchronous reactance unsaturated	88	91	102	104	102
T'do	No-load transient time constant	719	790	837	878	926
X'd	Direct-axis transient reactance saturated	17.9	16.8	17.8	17.2	16.1
T'd	Short-circuit transient time constant	74	74	74	74	74
X"d	Direct-axis subtransient reactance saturated	8.9	8.4	8.9	8.6	8
T"d	Subtransient time constant	7	7	7.4	7	7
X"q	Quadrature-axis subtransient reactance saturated	16.7	16.4	17.8	17.6	16.9
Xo	Zero sequence reactance	0.74	0.7	0.74	0.71	0.67
X2	Negative sequence reactance saturated	12.87	12.44	13.36	13.15	12.51
Ta	Armature time constant	11	11	11	11	11

Other class H / 480 V data

io (A)	No-load excitation current SHUNT / AREP	0.77 / 1.06	0.77 / 1.06	0.76 / 1.03	0.75 / 1.02	0.72 / 0.98
ic (A)	On-load excitation current SHUNT / AREP	1.97 / 2.69	1.99 / 2.71	2.1 / 2.86	2.1 / 2.86	1.97 / 2.69
uc (V)	On-load excitation voltage SHUNT / AREP	24.1 / 17.4	24.3 / 17.5	25.6 / 18.5	25.5 / 18.4	24 / 17.3
ms	Response time (ΔU = 20% transient)	500	500	500	500	500
kVA	Start (ΔU = 20% cont. or ΔU = 30% trans.) SHUNT / AREP	29.4	35.8	43.3	51.9	63.1
%	Transient ΔU (on-load 4/4) SHUNT / AREP - P.F.: 0.8 $_{LAG}$	16.4	18.7	17.7	17.5	17
W	No-load losses	643	717	755	825	904
W	Heat dissipation	1 866	2 069	2 447	2 654	2 763

Transient voltage variation 480V - 60 Hz

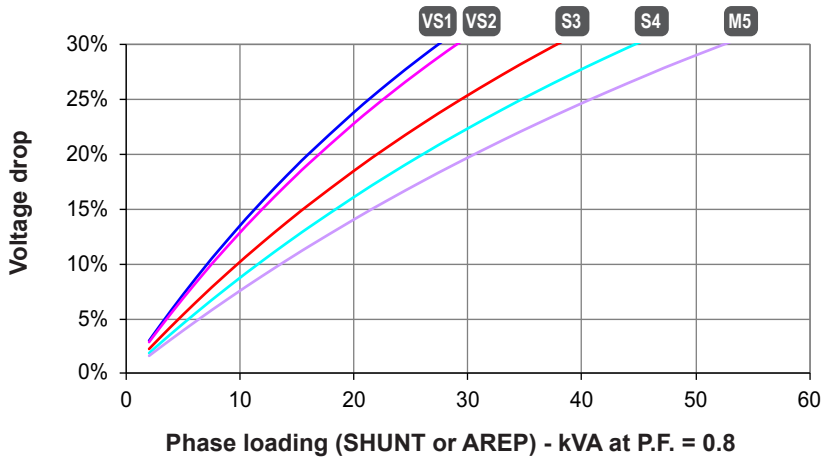

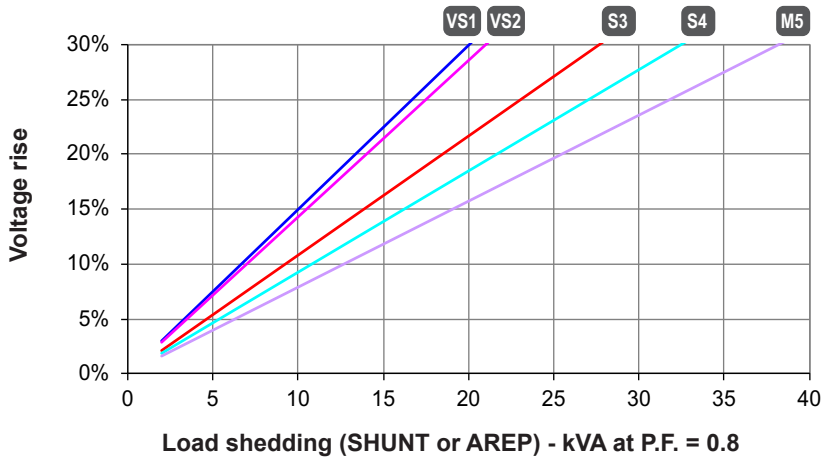

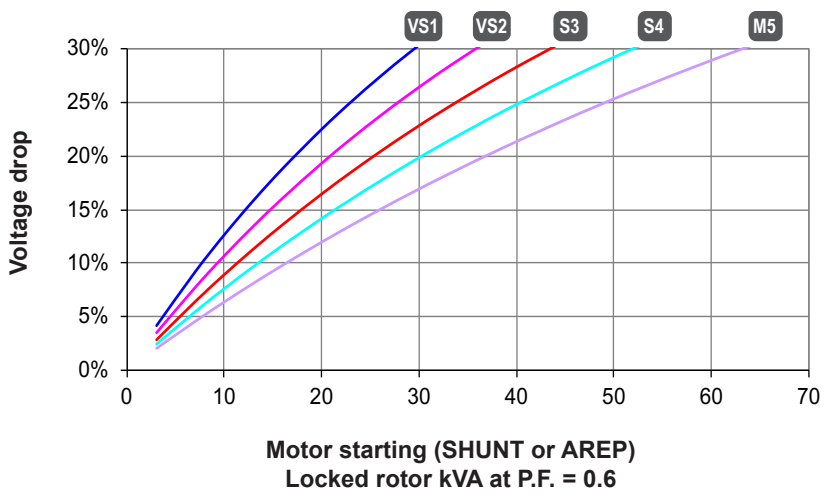

1) For a starting P.F. other than 0.6, the starting kVA must be multiplied by K = Sine P.F. / 0.8
2) For voltages other than 480V (Y), 277V (Δ), 240V (YY) at 60 Hz, then kVA must be multiplied by $(480/U)^2$ or $(277/U)^2$ or $(240/U)^2$.

3-phase short-circuit curves at no load and rated speed (star connection Y)

LSA 40 VS1

Symmetrical ——
Asymmetrical - - -

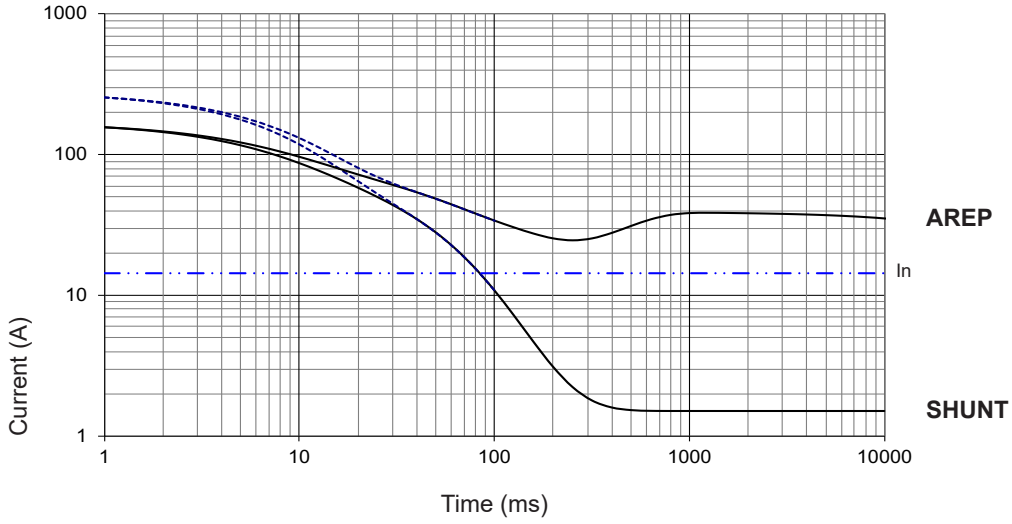

LSA 40 VS2

Symmetrical ——
Asymmetrical - - -

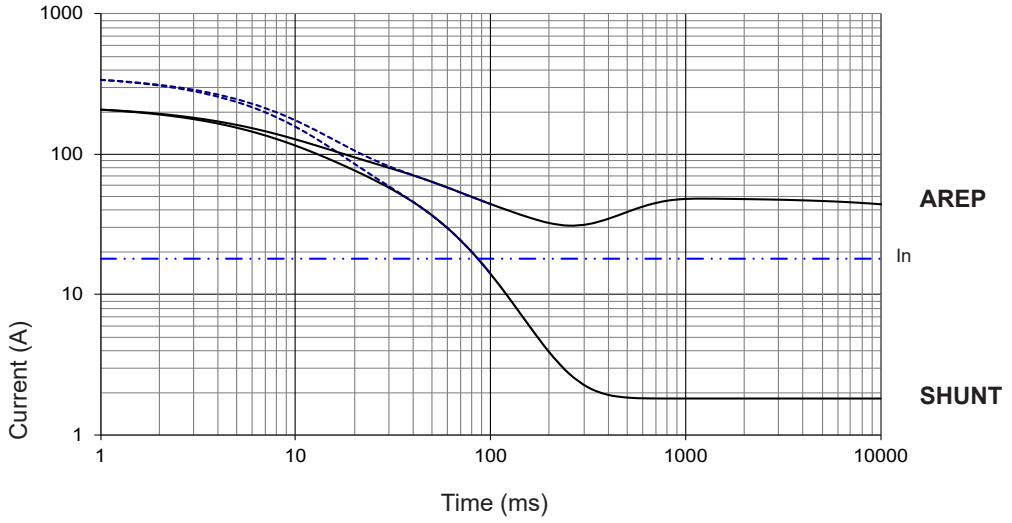

LSA 40 S3

Symmetrical ——
Asymmetrical - - -

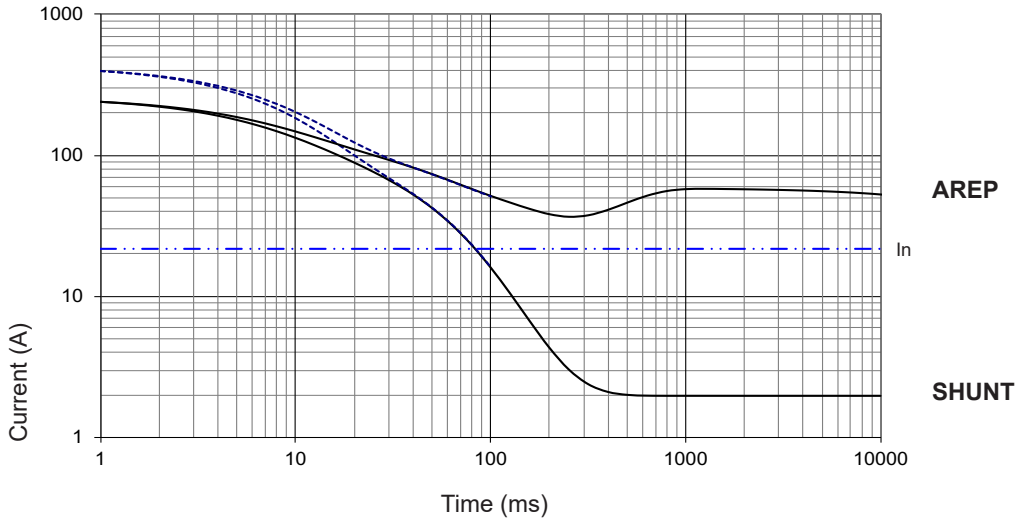

Influence due to connection
Curves shown are for star (Y) connection.
For other connections, use the following multiplication factors:
- Series delta : current value x 1.732 - Parallel star : current value x 2

3-phase short-circuit curves at no load and rated speed (star connection Y)

LSA 40 S4

Symmetrical ——
Asymmetrical - - -

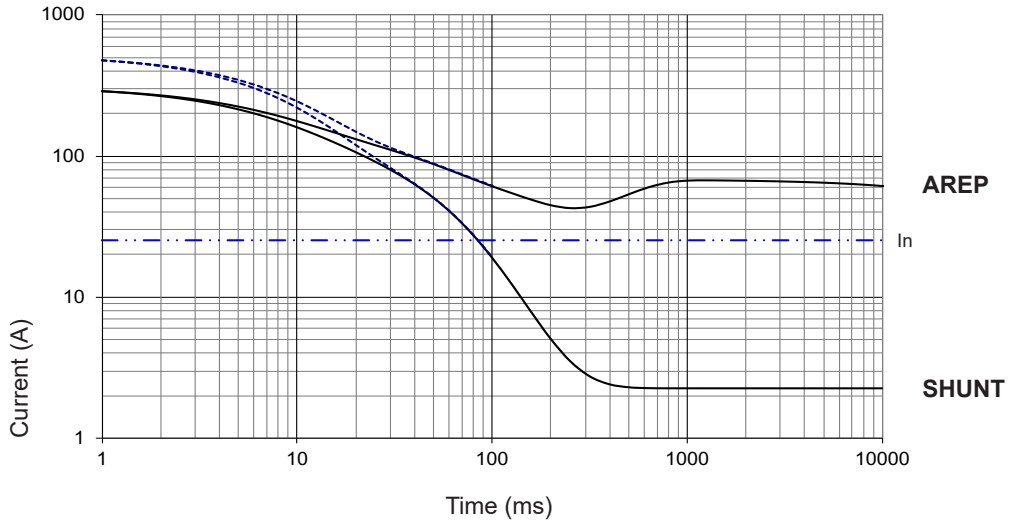

LSA 40 M5

Symmetrical ——
Asymmetrical - - -

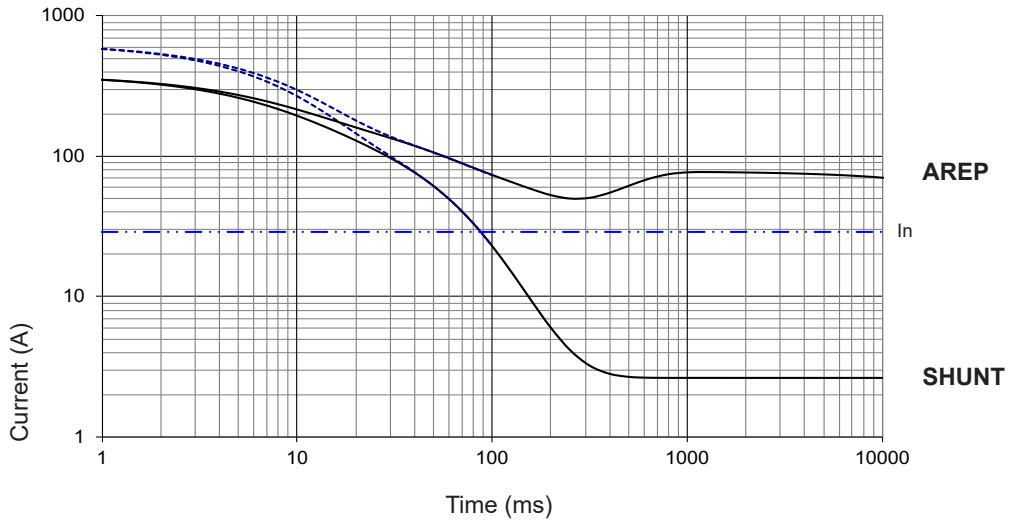

Influence due to short-circuit
Curves are based on a three-phase short-circuit.
For other types of short-circuit, use the following multiplication factors.

	3-phase	2-phase L/L	1-phase L/N
Instantaneous (max.)	1	0.87	1.3
Continuous	1	1.5	2.2
Maximum duration (AREP)		1.5	

Single-bearing dimensions

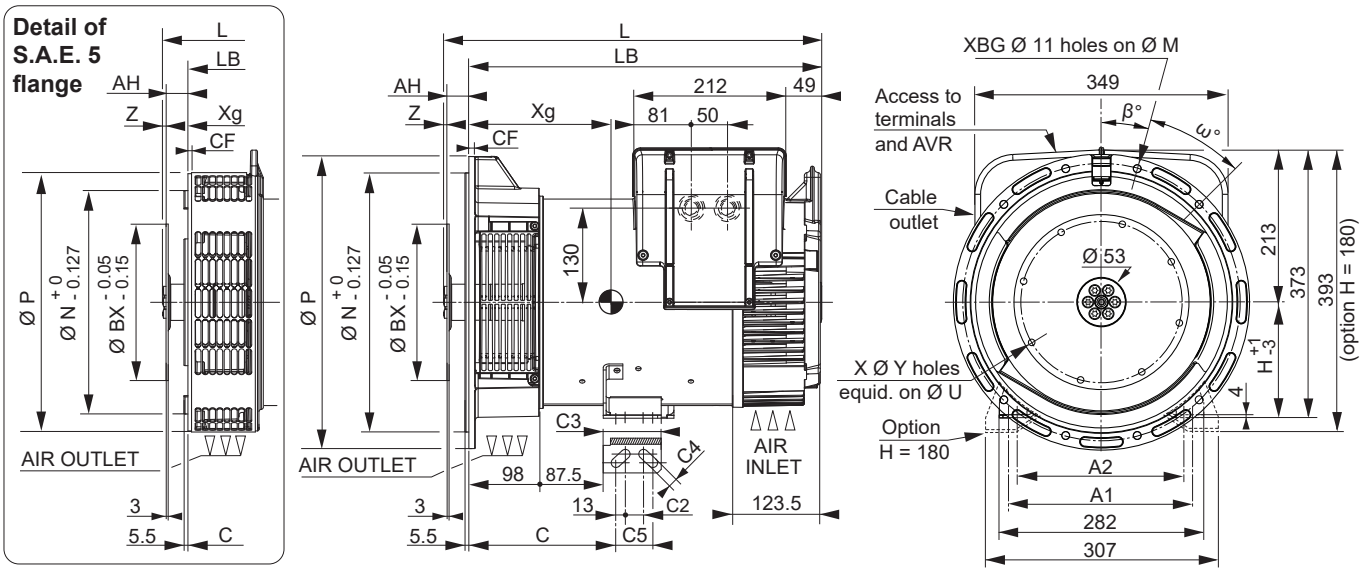

Dimensions (mm) and weight (kg)				
Type	L maxi*	LB	Xg	Weight
LSA 40 VS1	469	407	186	73
LSA 40 VS2	469	407	196	80
LSA 40 S3	499	437	204	87
LSA 40 S4	499	437	221	92
LSA 40 M5	519	457	221	102

* L maxi = LB + AH maxi + Z

Shaft height (mm)		
	Standard	*Option*
H	**160**	*180*
	Feet length	
C	203	*238*
C2	25	*22*
C3	80	*60*
C4	13	*12*
C5	51	*22*
A1	254	*279*
A2	230	-

Coupling			
Flange	**3**	**4**	**5**
Flex plate			
11 ½	x	-	-
10	x	x	-
8	x	x	-
7 ½	-	x	x
6 ½	-	x	x

Flange (mm)							
S.A.E.	P	N	M	XBG	β°	ω°	CF
5	358	314.32	333.38	8	22°30	45°	11
4	408	361.95	381	8*	15°	30°	9
3	460	409.58	428.62	8*	15°	30°	12

* Four lateral holes removal on S.A.E. 3 and 4

Flex plate (mm)						
S.A.E.	BX	U	X	Y	AH	Z
11 ½	352.42	333.38	8	11	39.6	0
10	314.32	295.28	8	11	53.8	0
8	263.52	244.48	6	11	62	0
7 ½	241.3	222.25	8	9	30.2	6
6 ½	215.9	200.02	6	9	30.2	6

Torsional analysis data

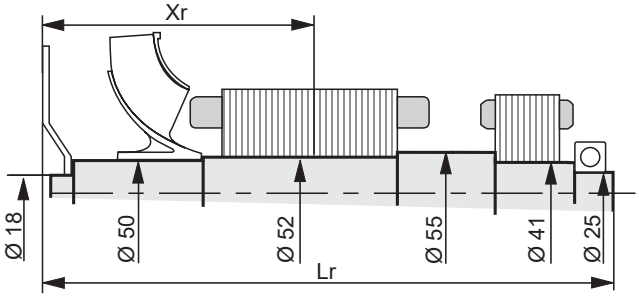

Centre of gravity: Xr (mm), Rotor length: Lr (mm), Weight: M (kg), Moment of inertia: J (kgm²): (4J = MD²)																				
Flex plate	S.A.E. 6 ½				S.A.E. 7 ½				S.A.E. 8				S.A.E. 10				S.A.E. 11 ½			
Type	Xr	Lr	M	J	Xr	Lr	M	J	Xr	Lr	M	J	Xr	Lr	M	J	Xr	Lr	M	J
LSA 40 VS1	234.1	425.2	27.53	0.0825	232.76	425.2	27.69	0.0852	260.42	457	28.04	0.0899	251.48	451.8	28.49	0.1003	231.25	434.6	28.99	0.1126
LSA 40 VS2	237.87	425.2	29.98	0.0911	236.62	425.2	30.14	0.0938	264.57	457	30.49	0.0985	255.87	451.8	30.94	0.1089	235.8	434.6	31.44	0.1212
LSA 40 S3	248.93	455.2	32.36	0.0976	247.71	455.2	32.52	0.1003	275.82	487	32.87	0.105	267.22	481.8	33.32	0.1154	247.19	464.6	33.82	0.1277
LSA 40 S4	252.3	455.2	34.3	0.104	251.14	455.2	34.46	0.1067	279.42	487	34.81	0.1114	270.95	481.8	35.26	0.1218	251.03	464.6	35.76	0.1341
LSA 40 M5	261.88	475.2	37.47	0.1141	260.77	475.2	37.63	0.1168	289.26	507	37.98	0.1215	280.95	501.8	38.43	0.1319	261.12	484.6	38.93	0.1442

NOTE : Dimensions are for information only and may be subject to modifications. Contractual 2D drawings can be downloaded from the Nidec Power website, 3D drawing files are available upon request.
The torsional analysis of the transmission is imperative. All values are available upon request.

Two-bearing dimensions

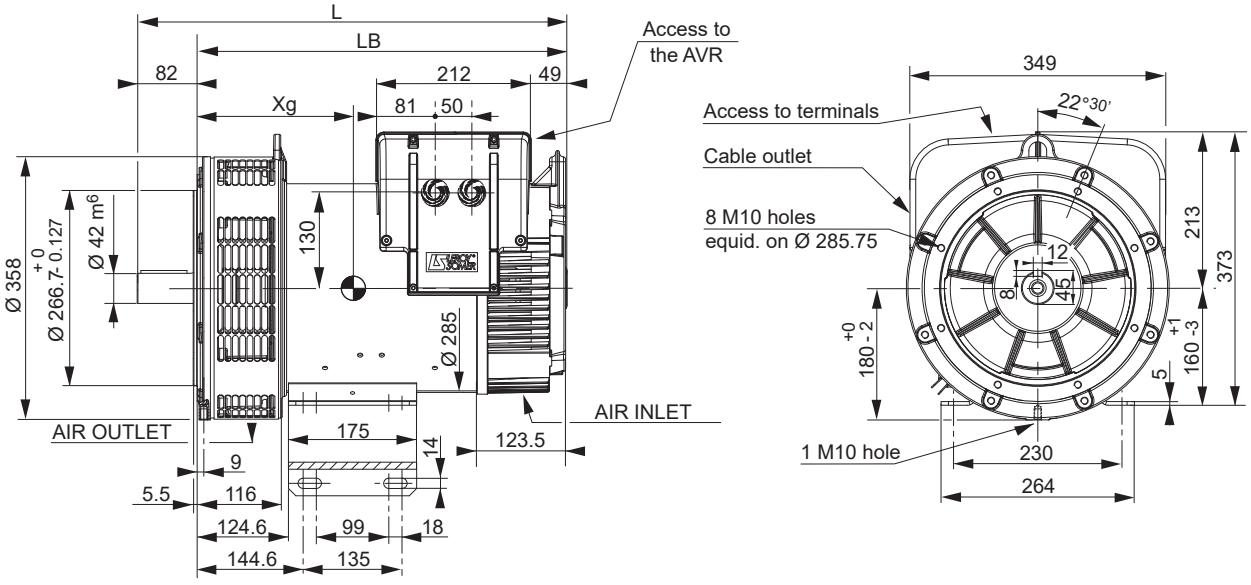

Dimensions (mm) and weight (kg)				
Type	L	LB	Xg	Weight
LSA 40 VS1	507	425	198	82
LSA 40 VS2	507	425	208	89
LSA 40 S3	537	455	216	96
LSA 40 S4	537	455	233	101
LSA 40 M5	557	475	233	109

Torsional analysis data

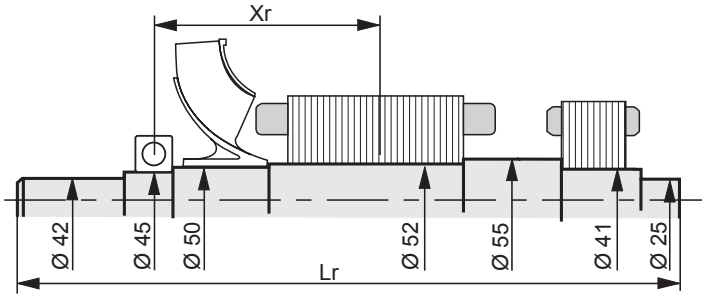

Centre of gravity: Xr (mm), Rotor length: Lr (mm), Weight: M (kg), Moment of inertia: J (kgm²): (4J = MD²)				
Type	Xr	Lr	M	J
LSA 40 VS1	199.99	495	27.36	0.0777
LSA 40 VS2	203.77	495	29.8	0.0863
LSA 40 S3	214.83	525	32.19	0.0929
LSA 40 S4	218.19	525	34.12	0.0993
LSA 40 M5	227.6	545	37.3	0.1094

NOTE : Dimensions are for information only and may be subject to modifications. Contractual 2D drawings can be downloaded from the Nidec Power website, 3D drawing files are available upon request.
The torsional analysis of the transmission is imperative. All values are available upon request.

central diesel

Nidec

All for dreams

© 2026 Moteurs Leroy-Somer SAS. The information contained in this brochure is for guidance only and does not form part of any contract. The accuracy cannot be guaranteed as Moteurs Leroy-Somer SAS have an ongoing process of development and reserve the right to change the specification of their products without notice.

Moteurs Leroy-Somer SAS. Headquarters: Bd Marcellin Leroy, CS 10015, 16915 Angoulême Cedex 9, France. Share Capital: 32,239,235 €, RCS Angoulême 338 567 258.

6242 en - 2026.02 / d